BROOKVENT™

airstream

DMEV HT

SINGLE FLOW DECENTRALISED MECHANICAL VENTILATION UNIT FOR CONTINUOUS RUNNING

Installation, maintenance & user manual

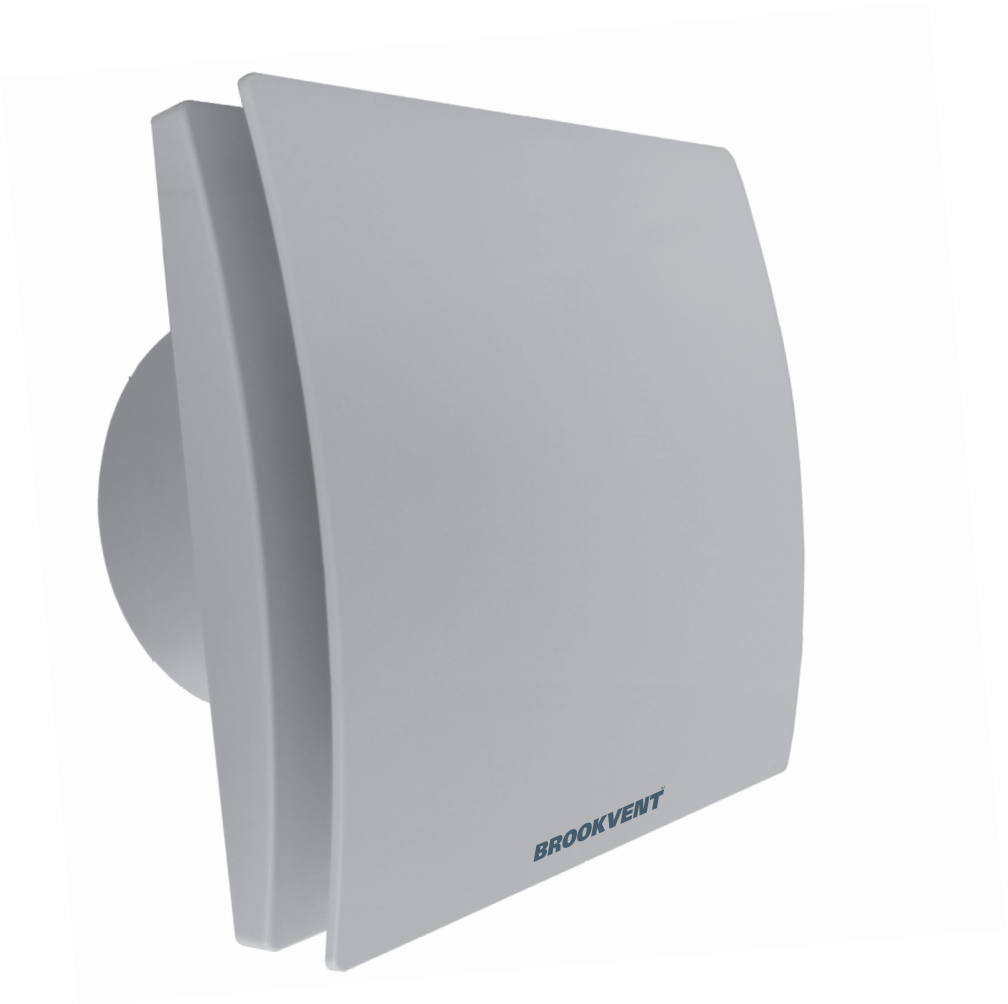

PRODUCT CODE

AF 90-DMEV-100HT

DESCRIPTION

airstream DMEV 100 HT

CONTENTS

PLEASE KEEP THESE INSTRUCTIONS WITH THE PRODUCT.
Please read this manual fully prior to installing the MVHR unit.

1.0	Introduction	3
1.1	Model Variations	3
1.2	Product Guarantee	3
2.0	Safety	4
2.1	Technical specifications	5
3.0	Operation	5
3.1	Minimum continuous speed	6
3.2	Intermediate speed	6
3.3	Maximum speed	6
3.4	Installation type	6
3.5	Constant flow operation	7
3.6	Humidistat	7
3.7	Run-on timer	7
4.0	Installation	8
5.0	Mounting and wiring diagram	8
6.0	Maintenance/Cleaning	12
7.0	ErP Directive - Regulations 1253/2014 - 1254/2014	13
8.0	Disposal and recycling	14
	Customer support	14

IMPORTANT

This appliance is not intended for use by persons (including children) with reduced physical sensory or mental capabilities, or lack of experience and knowledge, unless they have been given supervision or instruction concerning use of the appliance by a person responsible for their safety.

1.0 Introduction

DMEV is a decentralised mechanical ventilation unit designed to ensure air extraction in small/medium-sized rooms. Suitable for air discharge in the presence of long ducted system. Wall, ceiling or window installation (fig.1).

Read this manual carefully before using the product and keep it in a safe place for reference.
This product was constructed up to standard and in compliance with regulations relating to electrical equipment and must be installed by technically qualified personnel.
The manufacturer assumes no responsibility for damage to persons or property resulting from failure to observe the regulations contained in this booklet.

1.1 Model Variations

PRODUCT CODE	DESCRIPTION
AF 90-DMEV-100HT	airstream DMEV 100 HT

1.2 Product Guarantee

This product is guaranteed against defects for a period of 2 years from the date of purchase with the first year covering parts and labour and the remaining year covering parts only.

In the instance of a defect, Brookvent may repair the product, replace the product free of charge or refund the cost of the product at Brookvent's own discretion. In terms of installation, operation and maintenance please follow all instructions provided. If this product has been misused, not properly maintained or handled carelessly it may lead to this guarantee being declared void.

Brookvent does not accept liability for damage caused by non-observance of the installation instructions.
Service activities must be carried out by Brookvent or by competent installers using original Brookvent parts.
This guarantee does not affect your statutory right as a consumer.

Brookvent operates a policy of continuous innovation and improvement and thus reserves the right to alter product specifications and appearances without notice.

2.0 Safety

- ✓ The device should not be used for applications other than those specified in this manual.
- ✓ After removing the product from its packaging, verify its condition. In case of doubt, contact a qualified technician. Do not leave packaging within the reach of small children or people with disabilities.
- ✓ Do not touch the appliance with wet or damp hands/feet.
- ✓ This appliance can be used by children aged from 8 years and above and persons with reduced physical, sensory or mental capabilities or lack of experience and knowledge if they have been given supervision or in struction concerning use of the appliance in a safe way and understand the hazards involved. Children shall not play with the appliance. Cleaning and user maintenance shall not be made by children without supervision.
- ✓ Do not use the product in the presence of flammable vapours, such as alcohol, insecticides, gasoline, etc.
- ✓ If any abnormalities in operation are detected, disconnect the device from the mains supply and contact a qualified technician immediately. Use original spare parts only for repairs.
- ✓ The electrical system to which the device is connected must comply with regulations.

- ✓ Before connecting the product to the power supply or the power outlet, ensure that:
  - the data plate (voltage and frequency) correspond to those of the electrical mains
  - the electrical power supply/socket is adequate for maximum device power. If not, contact a qualified technician.

- ✓ The device should not be used as an activator for water heaters, stoves, etc., nor should it discharge into hot air/fume vent ducts deriving from any type of combustion unit. It must expel air outside via its own special duct.
- ✓ Operating temperature: 0°C up to +40°C.
- ✓ The device is designed to extract clean air only, i.e. without grease, soot, chemical or corrosive agents, or flammable or explosive mixtures.
- ✓ Do not leave the device exposed to atmospheric agents (rain, sun, snow, etc.).
- ✓ Do not immerse the device or its parts in water or other liquids.
- ✓ Turn off the main switch whenever a malfunction is detected or when cleaning.
- ✓ For installation an omnipolar switch should be incorporated in the fixed wiring, in accordance with the wiring regulations, to provide a full disconnection under overvoltage category III conditions (contact opening distance equal to or greater than 3mm).
- ✓ If the supply cord is damaged, it must be replaced by the manufacturer, its service agent or similarly qualified persons in order to avoid a hazard.
- ✓ Do not obstruct the fan or exhaust grille to ensure optimum air passage.
- ✓ Ensure adequate air return into the room in compliance with existing regulations in order to ensure proper device operation.
- ✓ If the environment in which the product is installed also houses a fuel-operating device (water heater, methane stove etc., that is not a “sealed chamber” type), it is essential to ensure adequate air intake, to ensure good combustion and proper equipment operation.
- ✓ Install the product so that the impeller is not accessible from the air outlet side as verified by contact with the
- ✓ Test Finger (test probe “B” of the norm EN61032) in compliance with the current safety regulations.

Attention: do not mount the product on the ceiling without this kit.

2.1 Technical specifications

- ✓ Material: high quality, impact and UV-resistant ABS colour RAL 9010.
- ✓ Design front cover removable for cleaning without the use of tools.
- ✓ High efficiency aerodynamic fan with “winglet” blades to optimise quietness and efficiency.
- ✓ Single phase EC Brushless motor for energy saving, with integral thermal protection.
- ✓ Motor mounted on high quality ball bearings.
- ✓ Selectable minimum speed for continuous running and intermediate speed.
- ✓ Option to boost from minimun speed through LS connection.
- ✓ Selection of the installation type (through wall or in-room).
- ✓ Selection of smart humidity control and intelligent run-on timer.
- ✓ Selection of constant volume mode.
- ✓ Suitable for continuous running.
- ✓ The fan is double insulated: no earth connection is required.
- ✓ IPX4 wall installation; IPX2 ceiling installation.
- ✓ Power supply 220-240V~ 50/60Hz

3.0 Operation

Upon power-up, the unit runs at the minimum continuous speed.
If humidistat or timer is activated, the unit runs at the intermediate speed.
If the external switch is activated, the unit runs at the maximum speed.
After the external switch is off, the unit continues to run at the intermediate speed for a period of time, then it returns to the selected minimum speed (or to the intermediate speed in case humidistat or run-on timer operation is on).

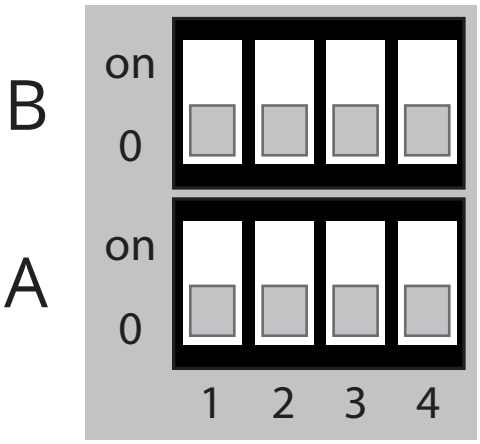

The functionalities can be set/enabled through the Dip Switches A and B on the electronic circuit (with disconnected from the main supply unit).

3.1 MINIMUM CONTINUOUS SPEED

Upon power-up, the unit runs at the minimum continuous speed settable from 0 to 58m³/h (i.e. from 0 to 16l/s) by means of the switches as per table Dip Switch A.

3.2 INTERMEDIATE SPEED

The unit runs automatically at the intermediate speed settable from 29 to 72m3/h (i.e. from 8 to 20l/s) by means of the switches as per table Dip Switch A.
The intermediate speed can be activated when either of the below conditions have been met:
- the humidistat has been activated;
- the run-on timer has been activated.

3.3 MAXIMUM SPEED

The maximum speed fixed, at 90m3/h (i.e. 25l/s) in through-wall or 72m3/h (i.e. 20l/s) in in-room installation, can be activated through external switch, remote ambient sensor or light switch.

3.4 INSTALLATION TYPE

Based on the selected installation type, the unit scales its speed (minimum, intermediate and maximum) to obtain the selected air flow rates.

- Through-wall installation: unit is typically mounted on an external wall or window and discharge direct to the outside.
- In-room installation: unit is typically mounted on the ceiling or internal wall which are ducted to the outside.

NOTE: the unit runs at a higher speed when In-room installation is selected.
The installation type can be selected by means of the switches as per table Dip Switch A.

DIP SWITCH A											
1	2	3	4		installation	min speed		intermediate speed		max speed	
						m³/h	l/s	m³/h	l/s	m³/h	l/s
0	0	0	0	default	through-wall	18	5	47	13	90	25
0	0	on	0		through-wall	18	5	29	8	90	25
0	on	0	0		through-wall	29	8	47	13	90	25
0	on	on	0		through-wall	29	8	40	11	90	25
on	0	0	0		through-wall	40	11	47	13	90	25
on	0	on	0		through-wall	47	13	58	16	90	25
on	on	0	0		through-wall	58	16	72	20	90	25
on	on	on	0		through-wall	0	0	47	13	90	25
0	0	0	on		in-room	18	5	47	13	72	20
0	0	on	on		in-room	18	5	29	8	72	20
0	on	0	on		in-room	29	8	47	13	72	20
0	on	on	on		in-room	29	8	40	11	72	20
on	0	0	on		in-room	40	11	47	13	72	20
on	0	on	on		in-room	47	13	58	16	72	20
on	on	0	on		in-room	58	16	72	20	72	20
on	on	on	on		in-room	0	0	47	13	72	20

DIP SWITCH B		
1	costant flow	
on	enabled	
0	disabled	default

3.5 CONSTANT FLOW OPERATION

When the constant flow operation in enabled, the unit speeds up or slows down depending on the variations of the resistances caused by long length ducting or external windy conditions. The constant flow operation can be enabled/ disabled by means of switch 1 of Dip Switch B.

DIP SWITCH B		
2	**humidistat**	
on	disabled	
0	AUTO	default

3.6 HUMIDISTAT

The unit is equipped with a humidity sensor that operates in AUTO mode, i.e. the humidistat, which records the humidity levels, triggers if there is a steep variation of the humidity and if humidity level is over 65%. If the humidistat is activated, the unit runs at the intermediate speed and continues to run for a fixed time of 5 minutes after the umidity level stabilizes. The humidistat can be enabled/ disabled by means of switch 2 of Dip Switch B.

DIP SWITCH B		
3	**timer**	
on	disabled	
0	AUTO	default

3.7 RUN-ON TIMER

The unit is equipped with a run-on timer. When the external switch is turned off, the unit continues to run at the intermediate speed for the a period of time defined as follows:
- if the external switch is activated for less than 3 minutes, the unit does not run-on;
- if the external switch is activated for between 3 and 10 minutes, the unit runs on for 5 minutes;
- if the external switch is activated for between 10 and 20 minutes, the unit runs on for 10 minutes;
- if the external switch is activated for over 20 minutes, the unit runs on for 15 minutes.

When the time is expired, the unit returns to the minimum continuous speed.
The run-on Timer can be enabled/disabled by means of switch 3 of Dip Switch B.

4.0 INSTALLATION (Pic.1)

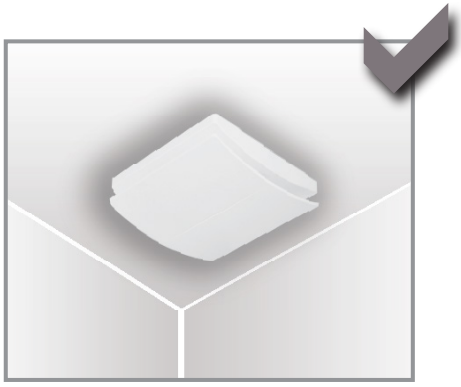

ceiling (accessory on demand)

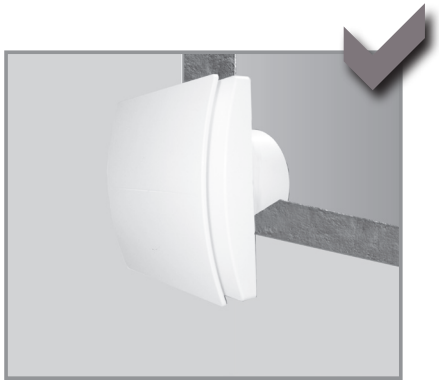

wall

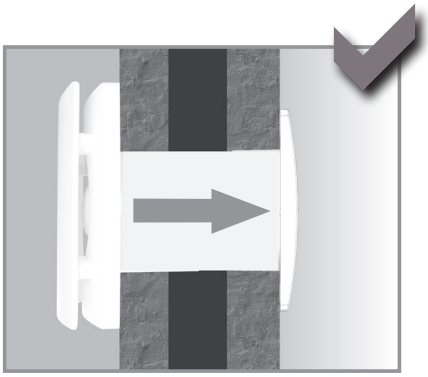

direct exhausting

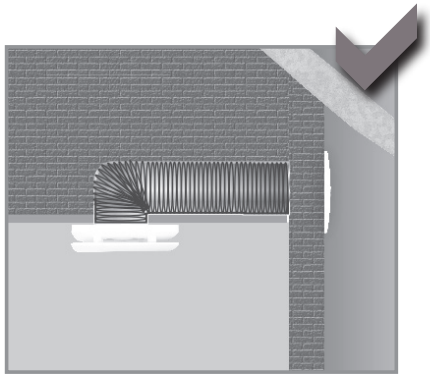

ducted

5.0 MOUNTING AND WIRING DIAGRAM

2

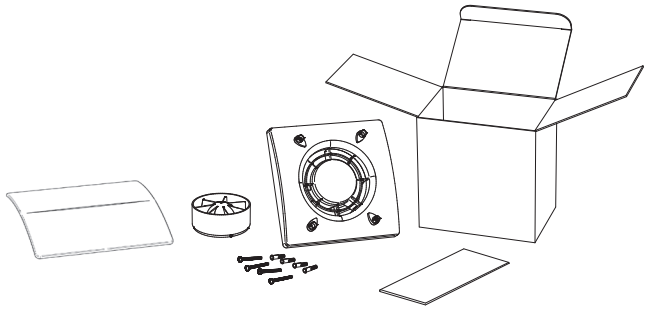

3

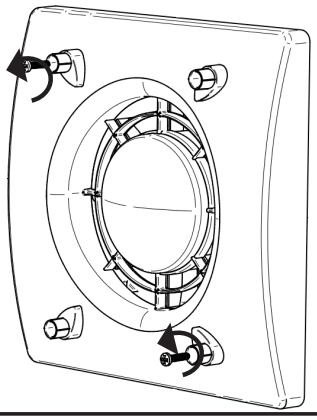

4

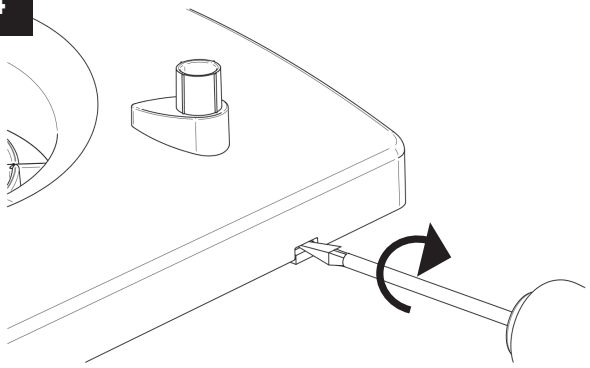

5

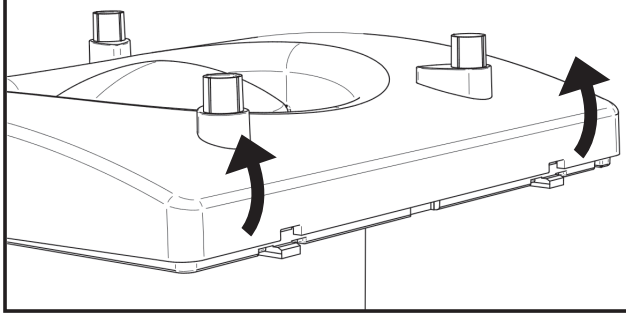

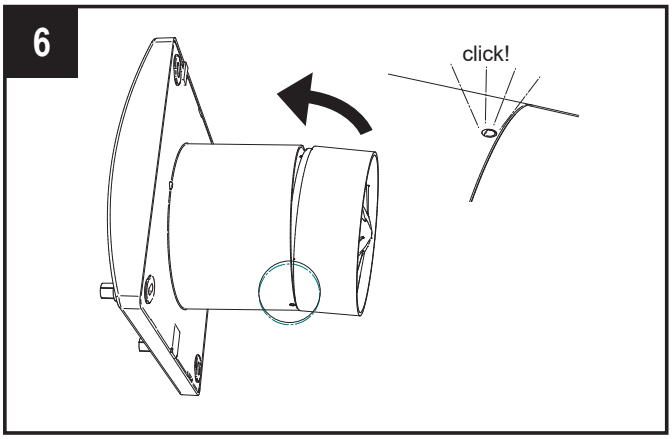

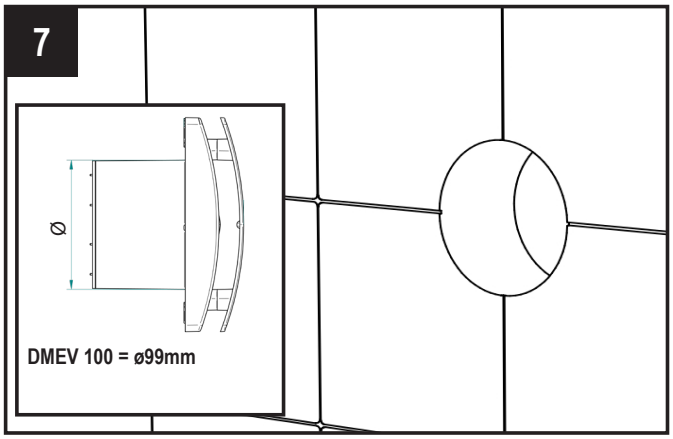

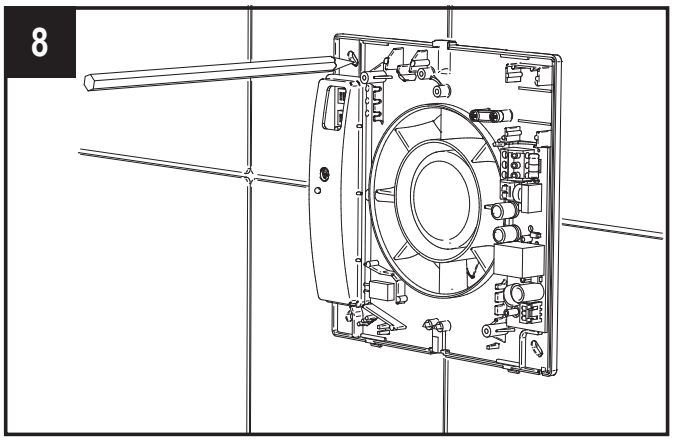

SURFACE CABLE

H03VV-F ; H05VV-F

2 X 0,5 ÷ 1,5mm2

3 X 0,5 ÷ 1,5mm2

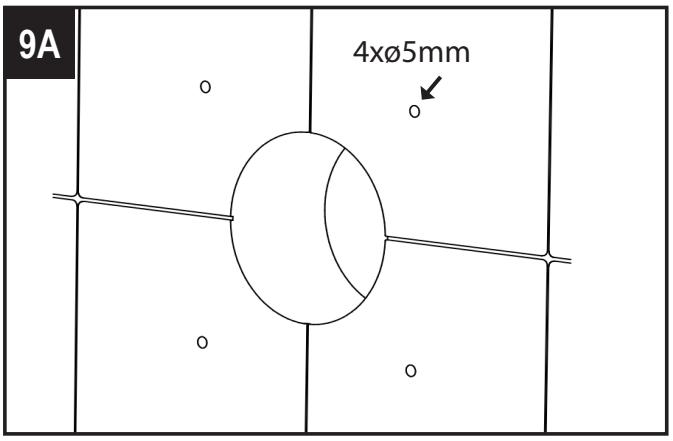

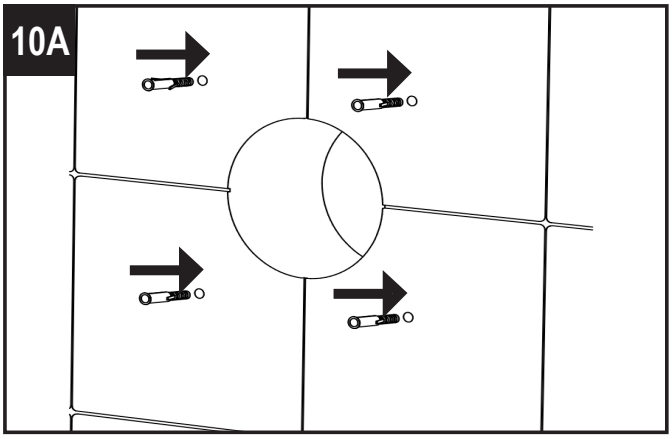

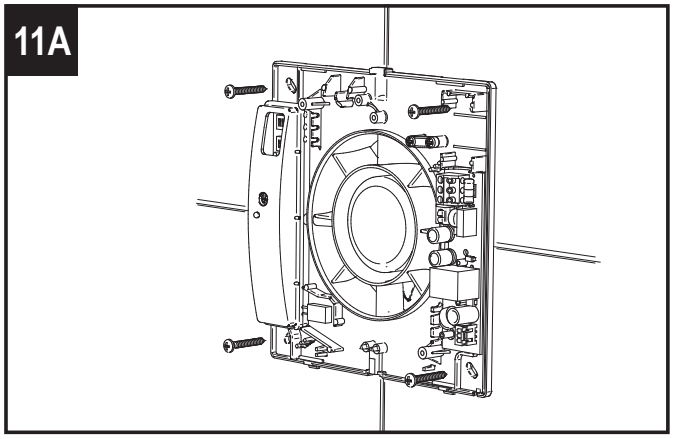

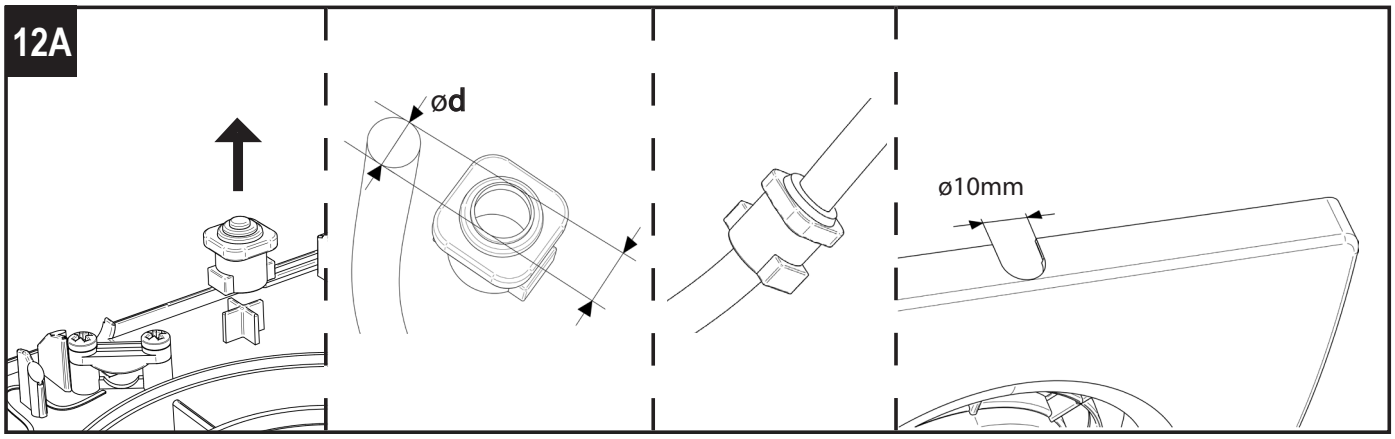

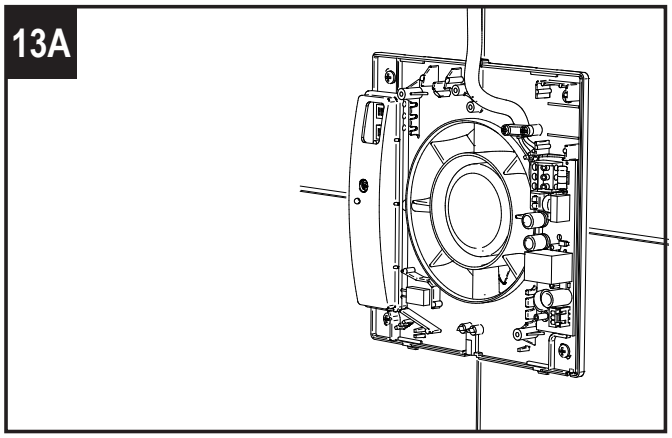

RECESSED CABLE ENTRY

H03VV-F ; H05VV-F

2 X 0,5 ÷ 1,5mm^2
3 X 0,5 ÷ 1,5mm^2

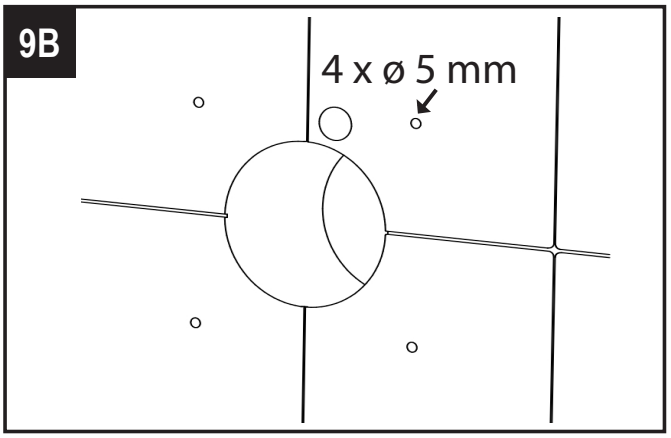

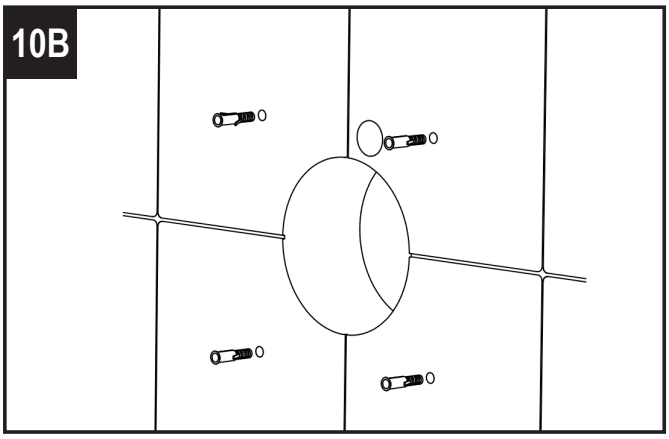

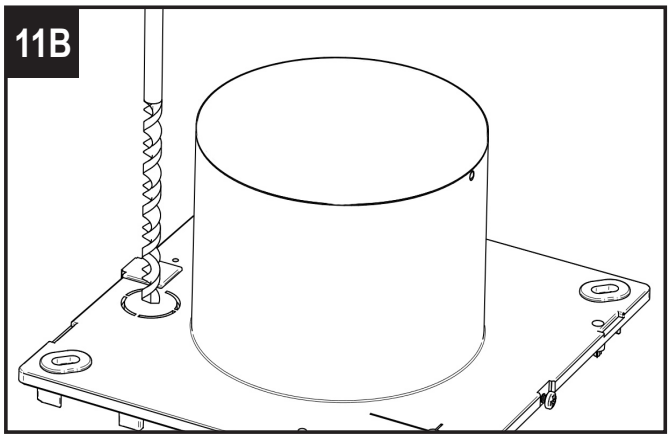

12B

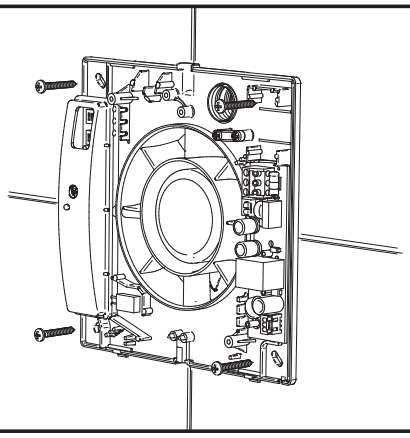

13B

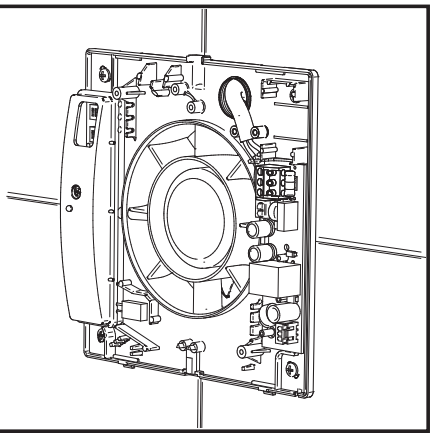

14

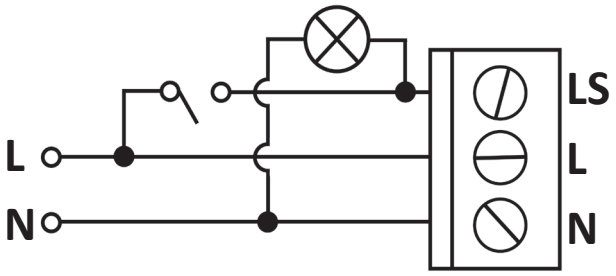

15

- When wiring to the PCB terminals, do not overtighten the screws: maximum torque 0,15Nm.

16

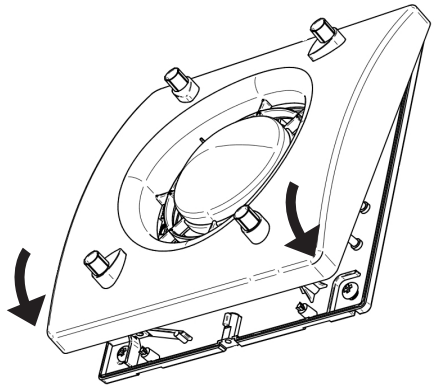

17

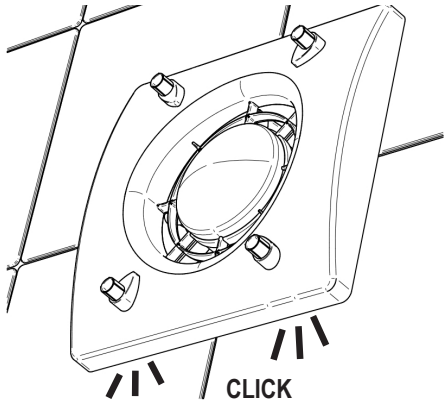

18

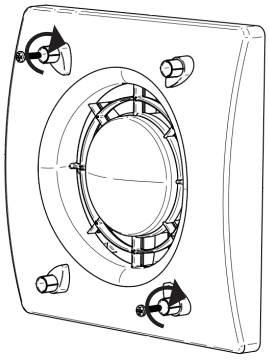

19

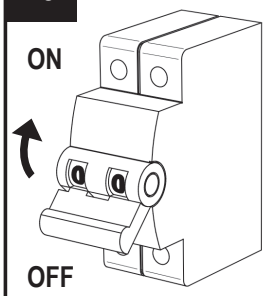

20

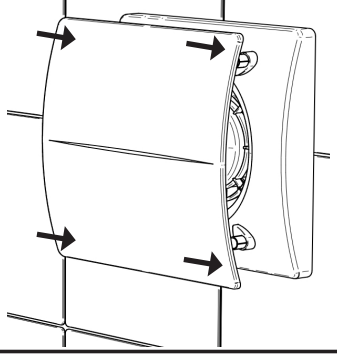

6.0 MAINTENANCE / CLEANING

21

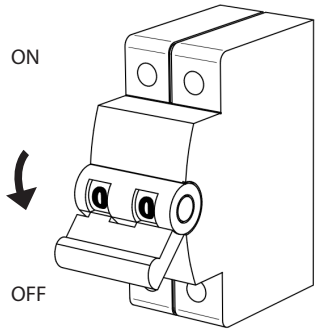

22

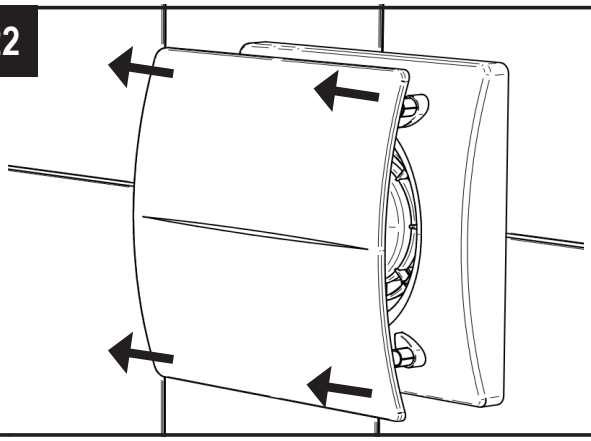

23

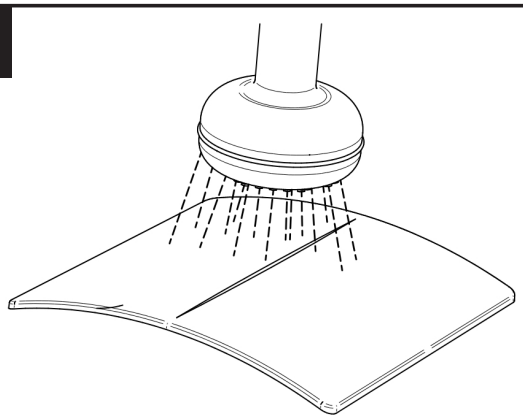

24

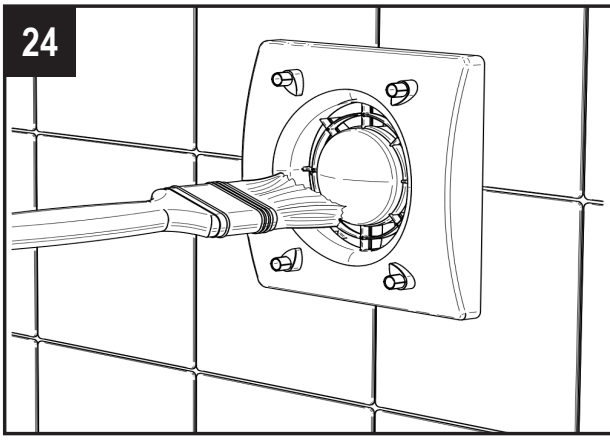

25

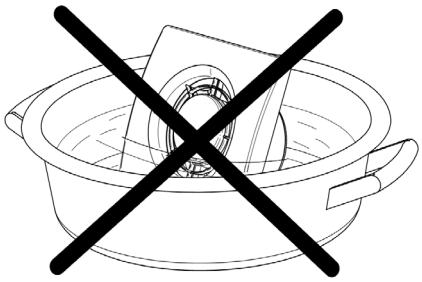

7.0 ErP Directive - Regulations 1253/2014 - 1254/2014

a)	**Mark**	-	**BROOKVENT**
b)	Model	-	DMEV 100 HT
c)	SEC class	-	C
c1)	SEC warm climates	kWh/m².a	-11,1
c2)	SEC average climates	kWh/m².a	-25,5
c3)	SEC cold climates	kWh/m².a	-50,6
	Energy label	-	No
d)	Unit typology	-	Residential - unidirectional
e)	Type of drive	-	Multi-speed drive
f)	Type of Heat Recovery System	-	Absent
g)	Thermal efficiency of heat recovery	%	N/A
h)	Maximum flow rate	m³/h	97
i)	Electric power input at maximum flow rate	W	6
j)	Sound power level (LWA)	dBA	50
k)	Reference flow rate	m³/h	68
l)	Reference pressure difference	Pa	20
m)	Specific power input (SPI)	W/m³/h	0,040
n1)	Control factor	-	0,65
n2)	Control typology	-	Local demand control
o1)	Maximum internal leakage rate	%	N/A
o2)	Maximum external leakage rate	%	N/A
p1)	Internal mixing rate	%	N/A
p2)	External mixing rate	%	N/A
q)	Visual filter warning	-	N/A
r)	Instructions to install regulated grilles	-	Check the instruction booklet
s)	Internet address for pre/disassembly instructions	-	www.brookvent.co.uk
t)	Airflow sensitivity to pressure variations	%	N/A
u)	Indoor/outdoor air tightness	m³/h	52
v1)	AEC - Annual electricity consumption - warm climates	kWh	0,3
v2)	Consumo annuo di energia (AEC) climi temperati; AEC - Annual electricity	kWh	0,3
v3)	AEC - Annual electricity consumption - cold climates	kWh	0,3
w1)	AHS - Annual heating saved - warm climates	kWh	11,9
w2)	AHS - Annual heating saved - average climates	kWh	26,2
w3)	AHS - Annual heating saved - cold climates	kWh	51,3

8.0 Disposal and recycling

Information on disposal of units at the end of life. This product complies with EU Directive 2002/96/EC.
The symbol of the crossed-out dustbin indicates that this product must be collected separately from other waste at the end of its life. The user must, therefore, dispose of the product in question at suitable electronic and electro-technical waste disposal collection centres, or else send the product back to the retailer when purchasing a new, equivalent type device. Separate collection of decommissioned equipment for recycling, treatment and environmentally compatible disposal helps to prevent negative effects on the environment and on health and promotes the recycling of the materials that make up the equipment.

Improper disposal of the product by the user may result in administrative sanctions as provided by law.

Customer Support

At Brookvent we pride ourselves on providing Gold Standard after sales and support to all customers.
Please feel free to contact one of our specialist team about any query you may have and we will be more than happy to assist you.

BROOKVENT

Brook House,
Dunmurry Industrial Estate,
Dunmurry,
Belfast
Northern Ireland, BT17 9HU

T: +44 (0) 28 9061 6505
Email: hello@brookvent.co.uk

It is important to retain this manual and make a copy available to any person using or working with (maintaining) the system.

Brookvent operates a policy of continuous innovation and improvement and thus reserves the right to alter product specifications and appearances without notice.

BROOKVENT™

airstream

DMEV HT

V1 24.05.2023 UK